ATS-CVD Series
CNT-YARN

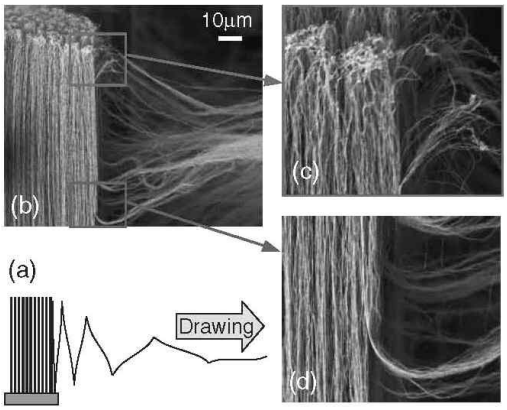

Special Features

- Dimension: 1645(L)X1043.5(H)X630(W) (mm^3)
- Wafer Size: 6 inch
- Motor Moving: 5mm/min ~ 300mm/min
- Accuracy: 100 ㎛
- Control: Touch Panel
- Main Power: 220V, 3phase, 6kW

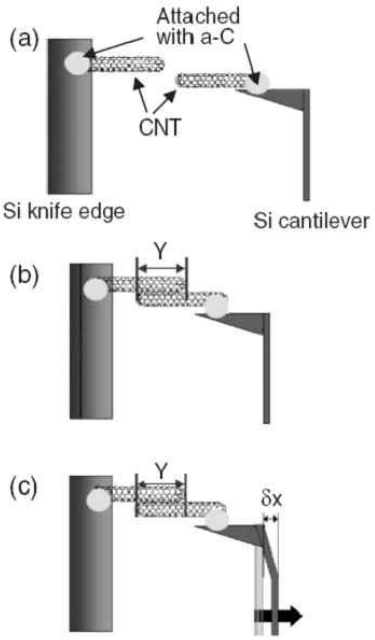

Illustrations showing the measurement of the static friction force. (a) A CNT from the cartridge was transferred and attached to the Si tip. (b) The CNT was overlapped with a CNT protruded from the cartridge by a distance Y. (c) The displacement dx was measured just after the two CNTs were separated from each other by manipulating the Si cantilever. The static friction force F is calculated from dx using $F = -k\delta x$, where k is the spring constant of the Si cantilever.

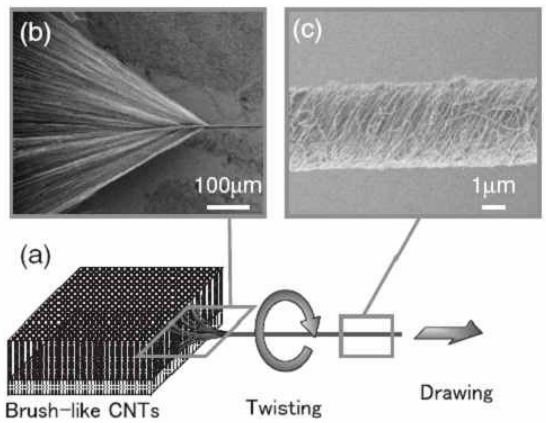

Schematic illustration of the spinning of CNT yarns (a) from brush-like CNTs and SEM images exhibiting (b) the process of twisting and drawing of a CNT yarn and (c) a twisted CNT yarn

Yoshikazu NAKAYAMA, "Synthesis, Nanoprocessing, and Yarn Application of Carbon Nanotubes",Japanese Journal of Applied Physics, Vol. 47, No. 10, 2008, pp. 8149.8156

Layout

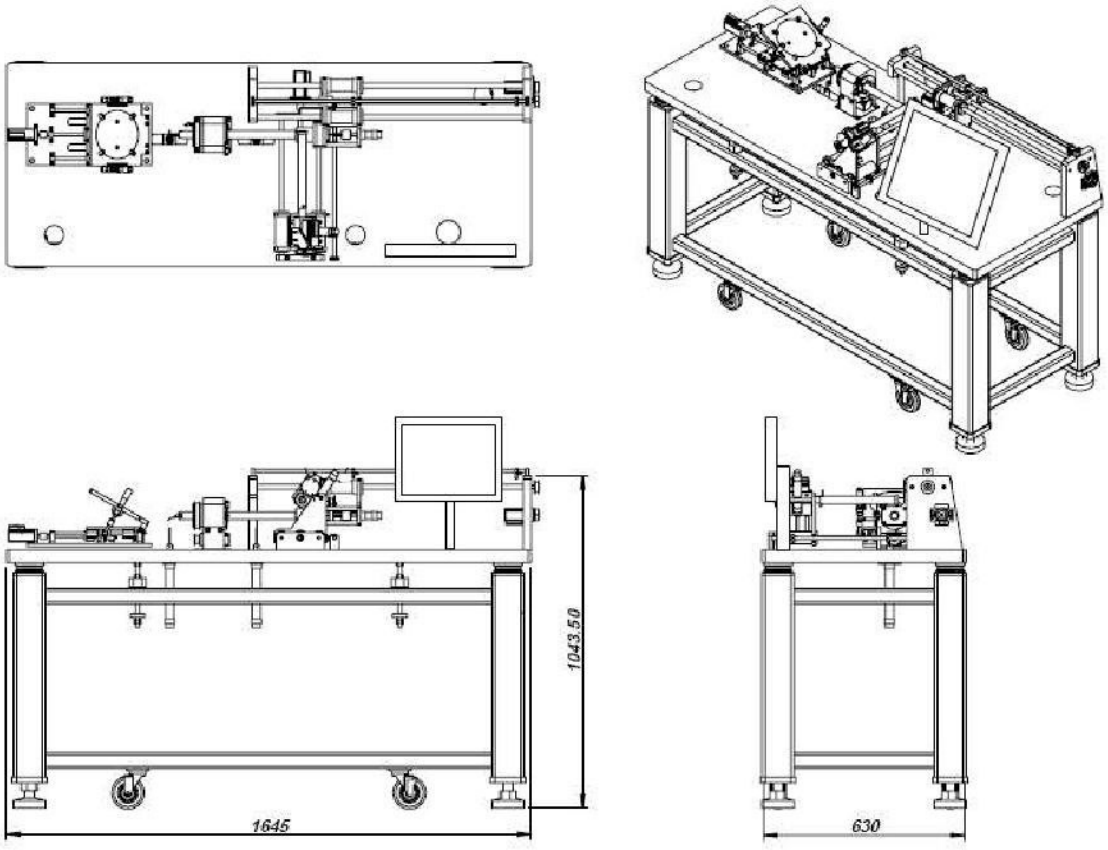

J-422, CHATRALA CIRCLE, RIICO INDUSTRIAL AREA,
SITAPURA, JAIPUR-302022, RAJASTHAN, INDIA

TEL/FAX:+91-0141-2771789
CONTACT:+91-8003220052
EMAIL: info@technos.in/avinash.c@technos.in